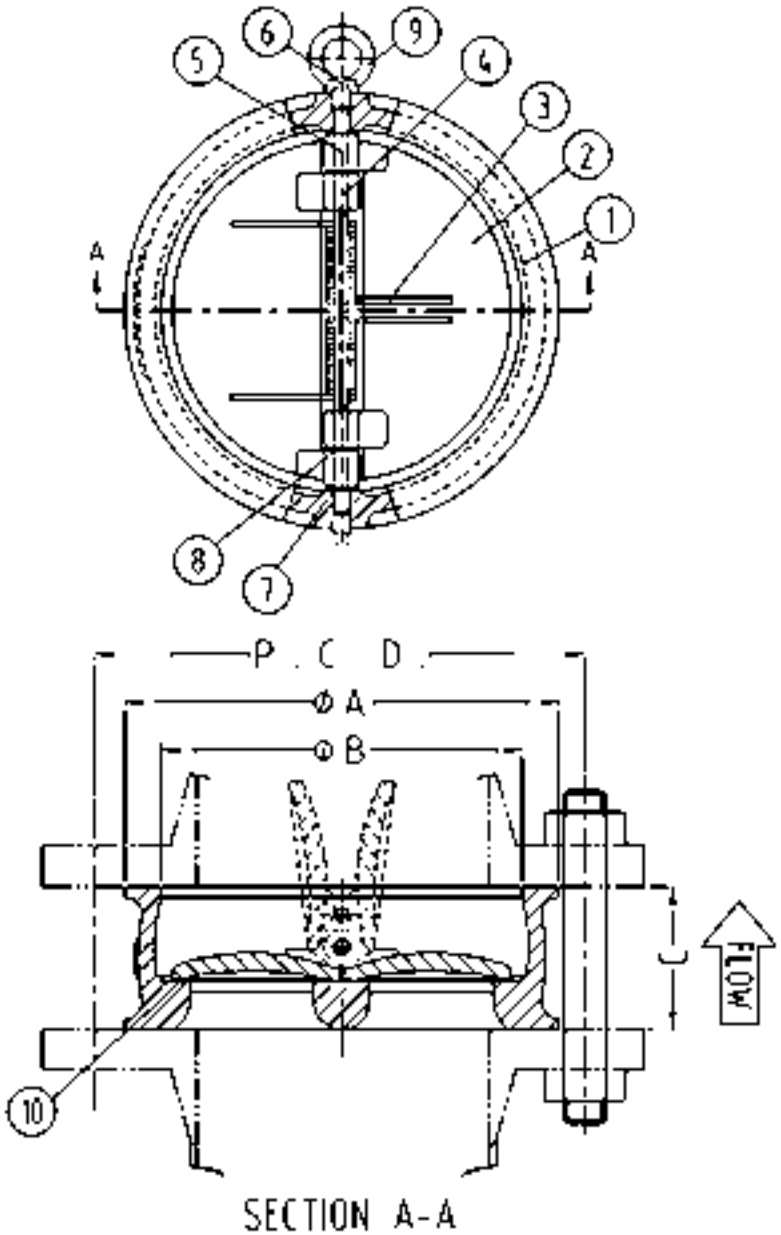

		SIZE	ØA	ØB	C	P.C.D.	W.T.	QTY
V		2"	105	60	54	120.6	2.0	1
V		2-1/2"	124	73	54	139.7	2.5	2
V		3"	137	89	57	152.4	3.5	11
V		4"	175	114	64	190.5	5.0	3
V		5"	197	141	70	215.9	6.0	2
V		6"	222	168	76	241.3	7.0	9
V		8"	279	219	95	298.5	16.0	10
V		10"	340	274	108	362.0	25.0	26
V		12"	410	324	143	431.8	45.0	5

NO.	PARTS NAME	MATERIALS	QTY	REMARKS
1	BODY	A536 65-45-12	1	
2	PLATE	B148 C95800	2	
3	*SPRING	SUS 316	1	
3	*SPRING	SUS 316	2	
4	HINGE PIN	SUS 316	1	
5	STOP PIN	SUS 316	1	
6	RETAINER	A105	4	
7	BODY BEARING	PTFE	2	
8	PLATE BEARING	PTFE	2	
9	EYE BOLT	A105	1	6" AND LARGER SIZES.
10	SEAT	NBR / VITON	1	

TEST STANDARD			ASME - B16.1 / API - 598		
TEST PRESSURE	SHELL			SEAT	
HYDROSTATIC	1.5"~12"	25.0	KG/CM²	1.5"~12"	14.0 KG/CM²
PRESSURE	14"~22"	19.0	KG/CM²	14"~22"	11.0 KG/CM²
FACE TO FACE	EN 558 - 1 / 50		WALL THICKNESS	API - 594	
DIMENSION OF END	ASME B16.5 - 150 LB				
DRAWING NAME	DUAL PLATE WAFER TYPE CHECK VALVE				
VALVE SERIAL	DWCV		DRAWING NO.	CV-TEC-CB2-A01	
DESIGNED BY			APPROVED BY	JACK LU	
DRAWNED BY			CHECKED BY	DAVID WANG	

JUN ENTERPRISES CORPORATION